The LCLStream: Multi-Institutional Data Analysis in Heterogeneous Computing Environments

Valerio Mariani / LCLS Data Analysis Department
SLAC National Accelerator Laboratory

SLAC NATIONAL ACCELERATOR LABORATORY

Stanford University | U.S. DEPARTMENT OF ENERGY

LCLStreamer (Summit Plus)

OAK RIDGE National Laboratory | LEADERSHIP COMPUTING FACILITY

ABOUT OLCF ▾ OLCF RESOURCES ▾ R&D ACTIVITIES ▾ SCIENCE AT OLCF ▾ FOR USERS ▾ COMMUNITY ▾

HOME / SUMMIT PLUS

Summit begins a new era

Five years after its debut as the fastest supercomputer in the world, Summit remains a powerful and reliable instrument for scientific discoveries in artificial intelligence, energy, climate, health, and other areas with a direct impact on national security and global welfare. The Department of Energy is extending Summit operations through October 2024, enabling researchers to pursue projects on one of the world's leading AI-enabled open science supercomputing platforms.

KEY LINKS

- Submit a proposal for SummitPLUS
- 2023 Notable System Changes – OLCF User Documentation

TOP

LCLStream (Summit Plus)

Data Streaming to Remote Facilities: Copying Files

- XTC files are huge
  - All of LCLS's data in raw format
- Psana needed at remote location (might be difficult to set up and run, different architecture):
  - To read the data
  - To interpret the data (Calibration / preprocessing)

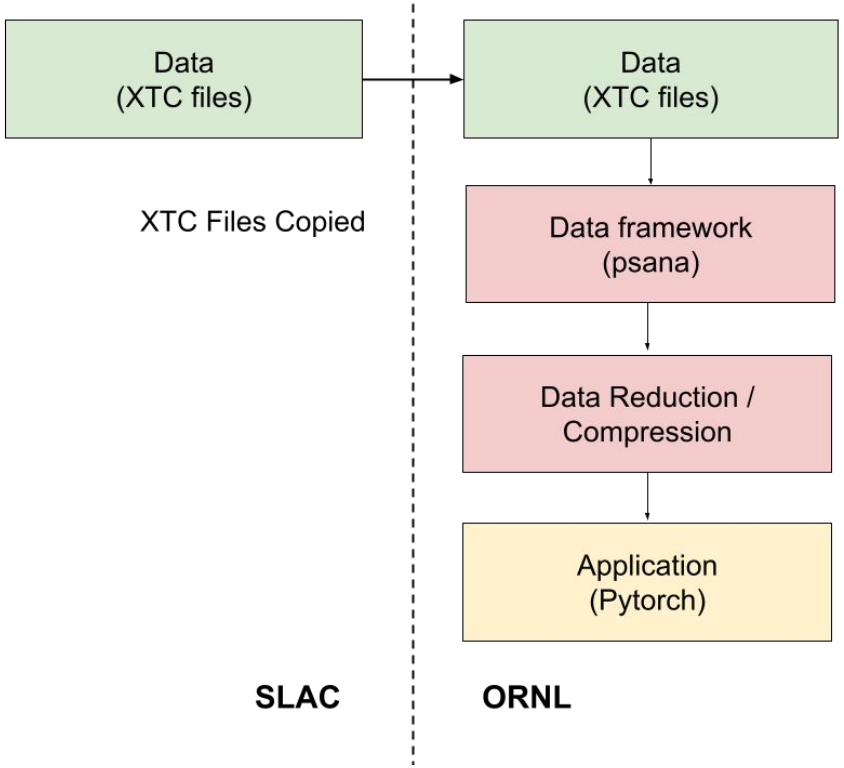

LCLStream (Summit Plus)

Data Streaming to Remote Facilities: LCLStream

- Streamed data is reduced:
  - Only relevant data is transferred (detectors, hits)
- Streamed data is preprocessed:
  - “Science Ready”
- Streamed data is compressed:
  - Lossless compression

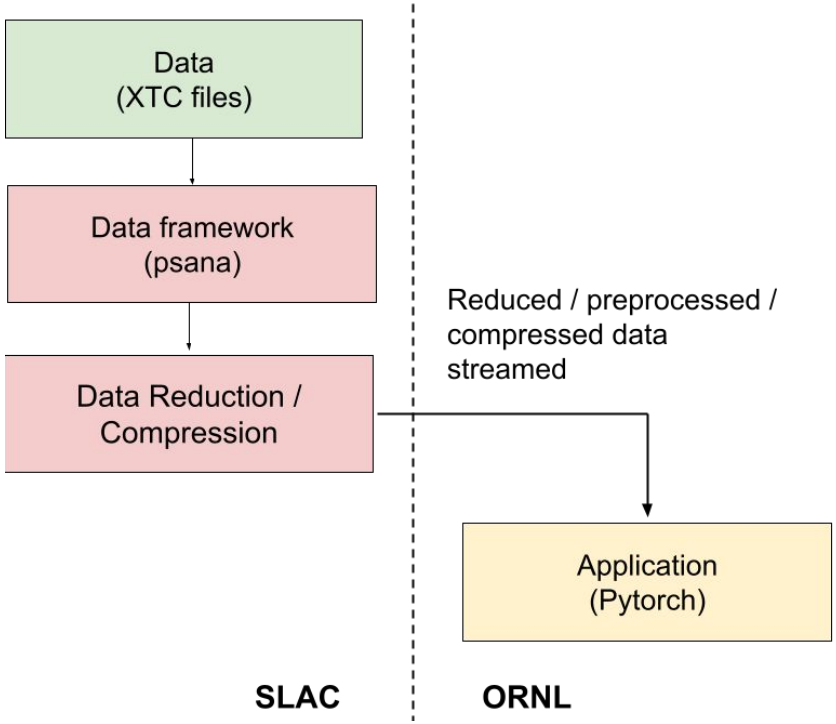

Remote-Location Data Processing: Streaming Demo

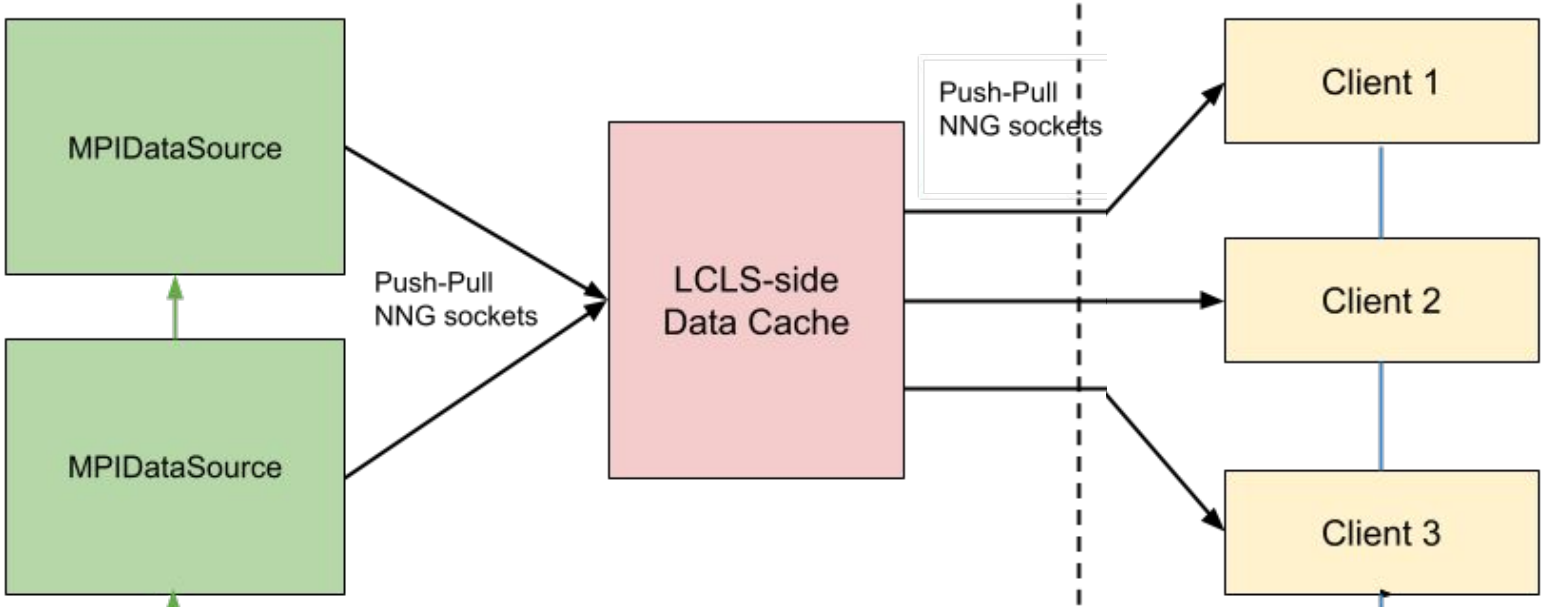

Remote-Location Data Processing: Streaming Demo

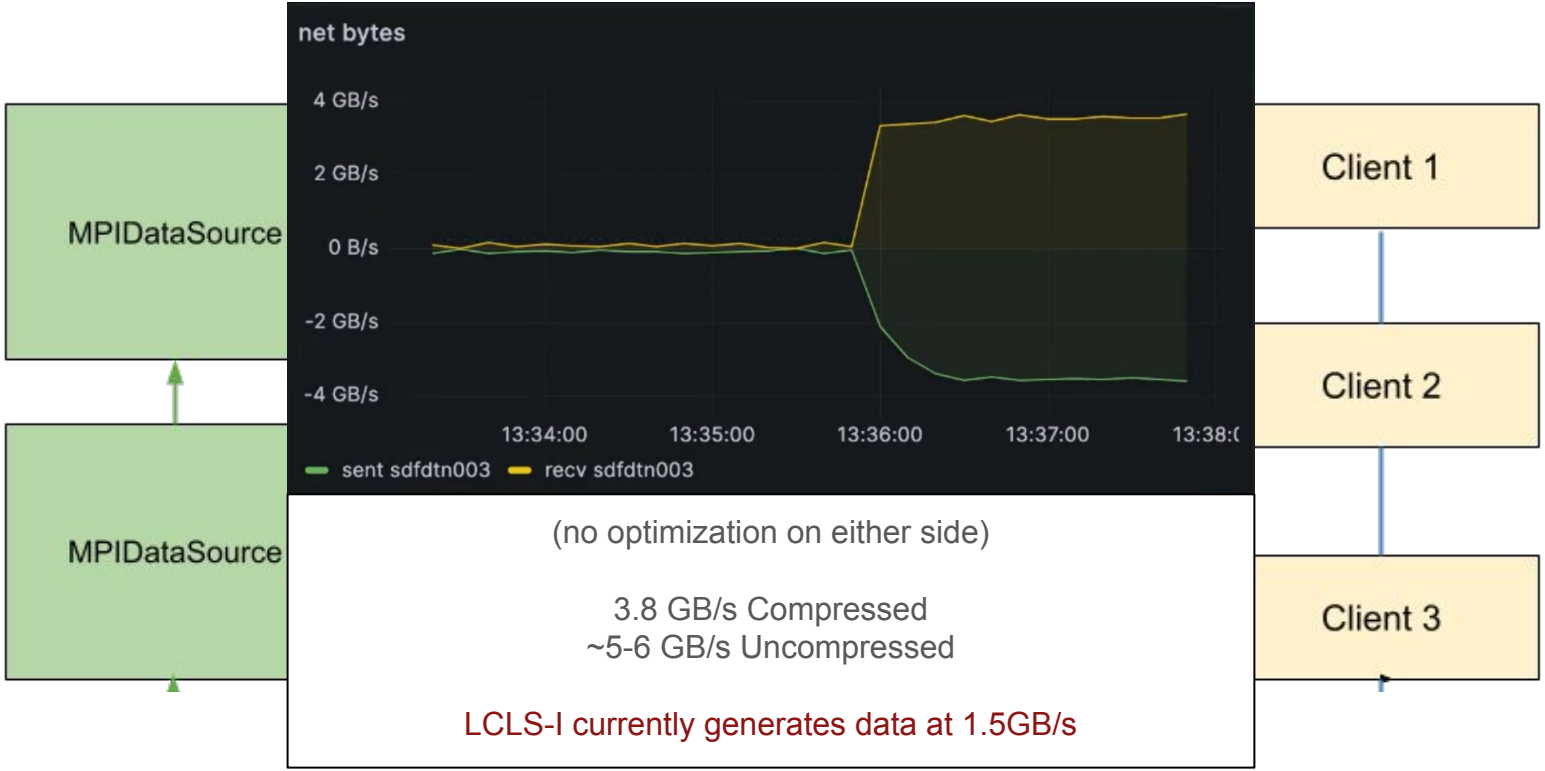

(no optimization on either side)

3.8 GB/s Compressed
~5-6 GB/s Uncompressed

LCLS-I currently generates data at 1.5GB/s

Remote-Location Data Processing: LCLStream

HTTP Server

- REST API

```
{
  exp: "xpptut15"
  run: 670
  access_mode: "smd"
  detector_name: "epix10k2M"
  mode: "raw"
  addr: "tcp://134.79.23.43:5000"
  img_per_file: 1
}
```

FastAPI

Streaming Data

- Streamed binary data (No file!)
- Internal structure: HDF5 file
- Minimal changes to applications

```
data_buffer =  socket.recv()

data = h5py.File(data_buffer)
```

(then same as before….)

- Compression / filters: HDF5 plugins

LCLS: Automated Run Processing (ARP)

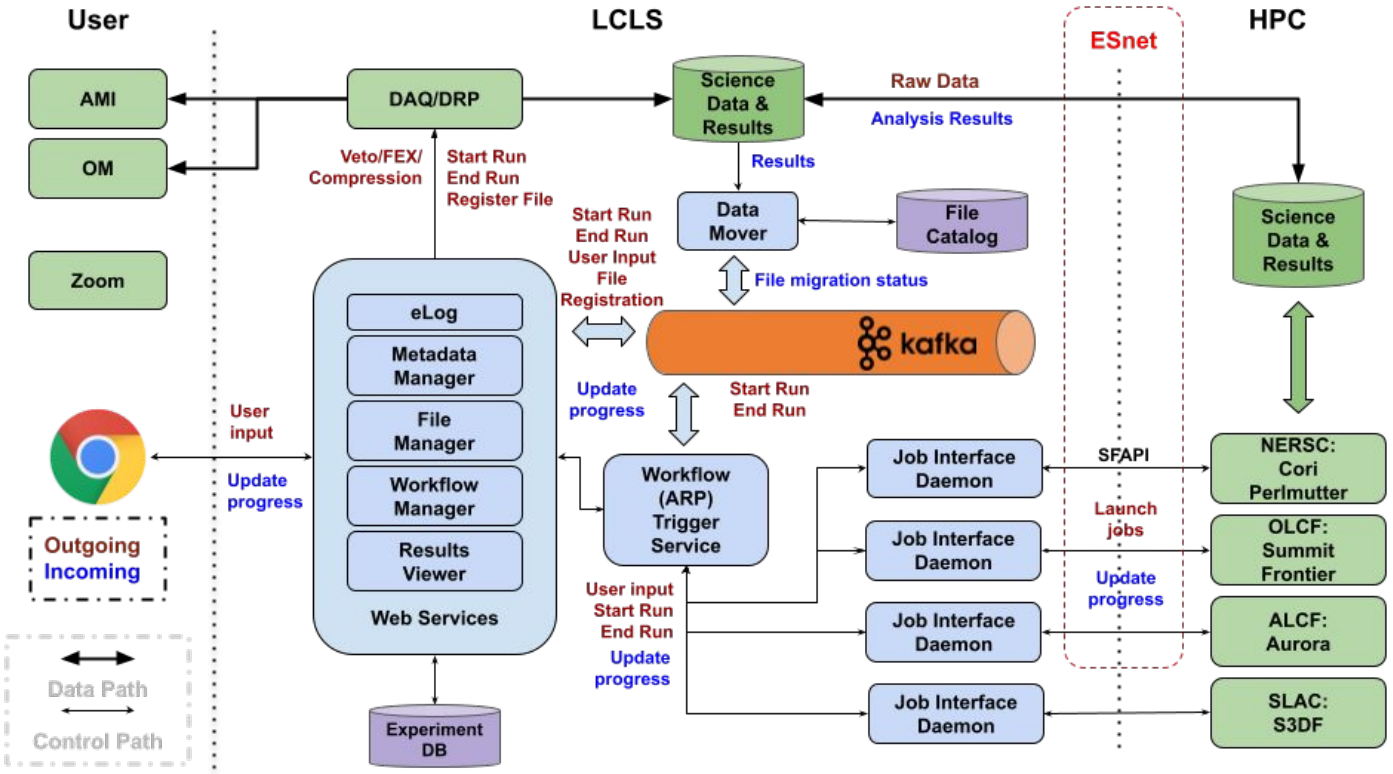

The LCLStream Ecosystem

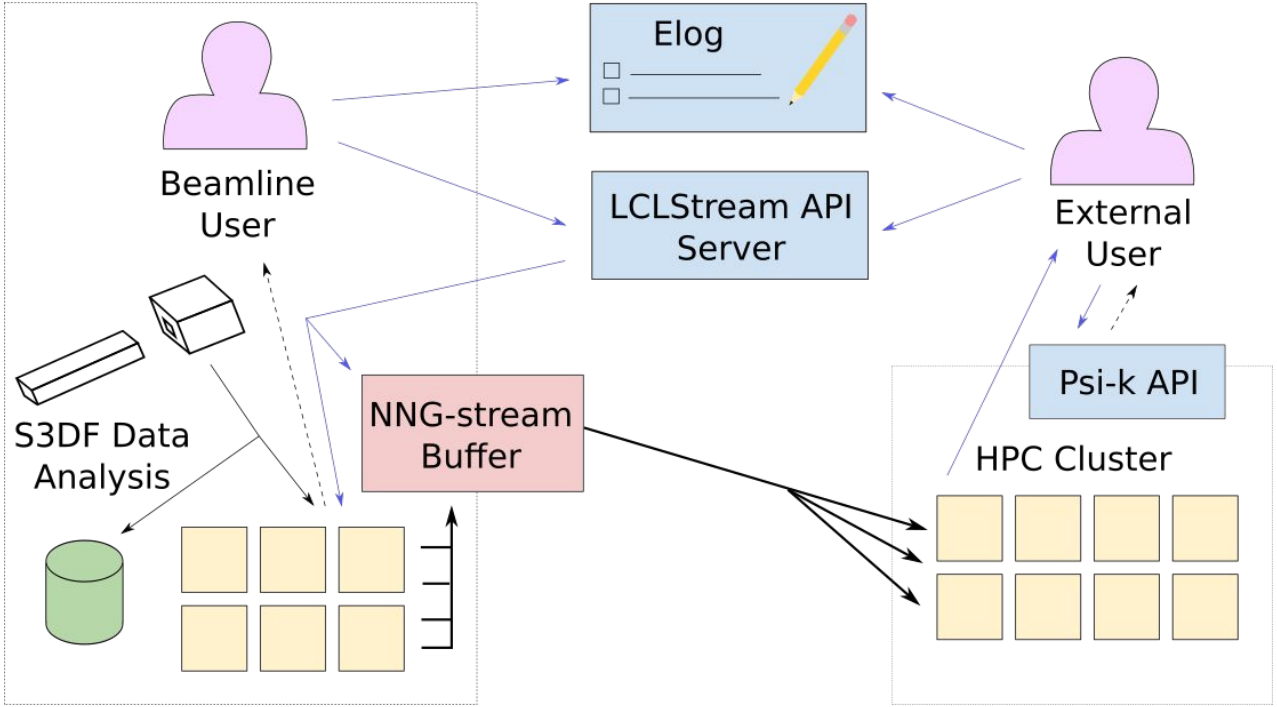

The LCLStream Ecosystem

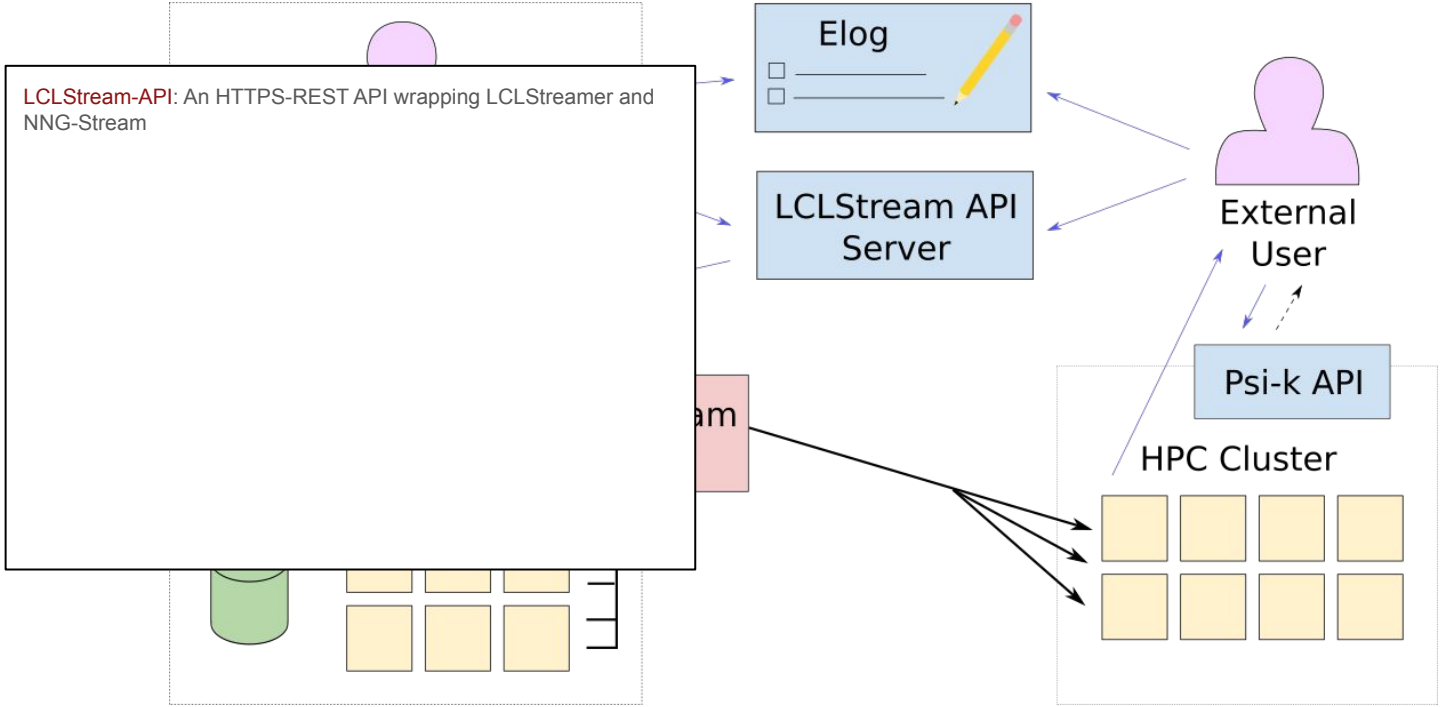

The LCLStream Ecosystem

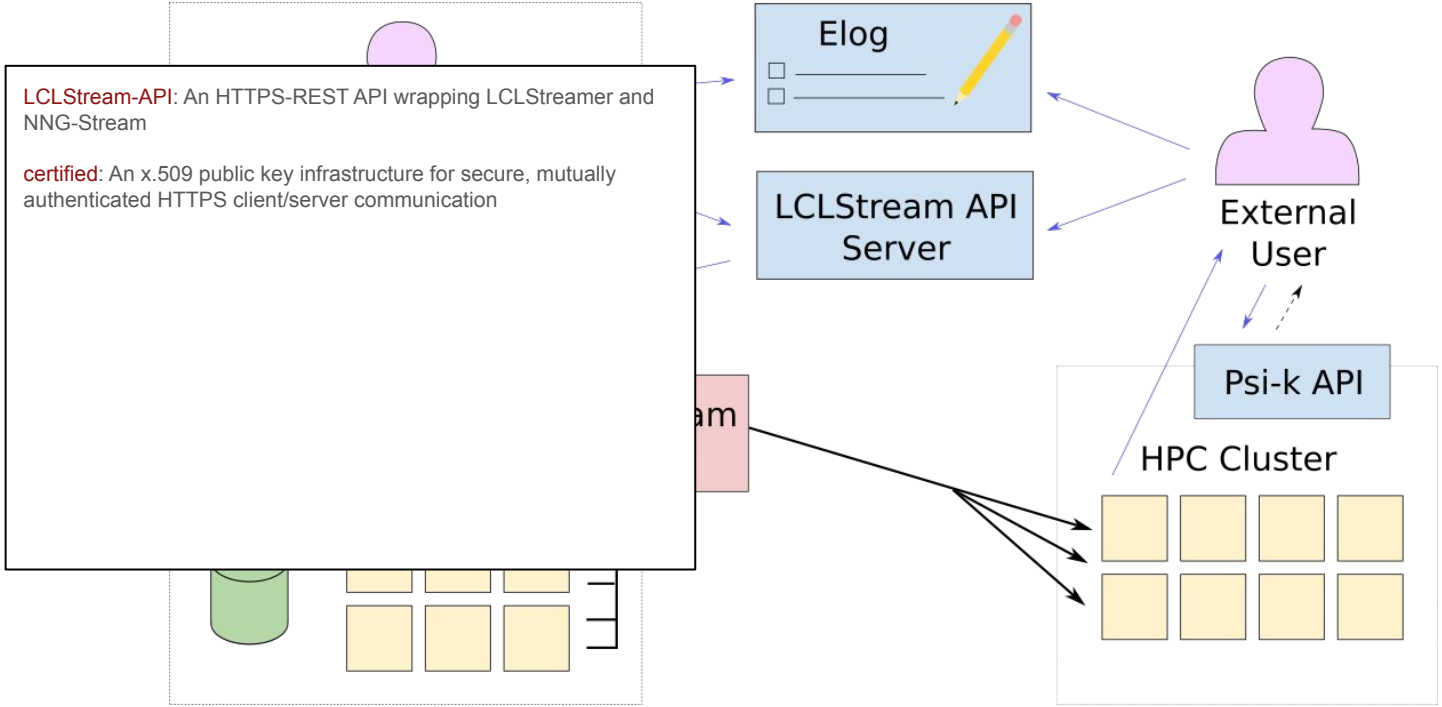

The LCLStream Ecosystem

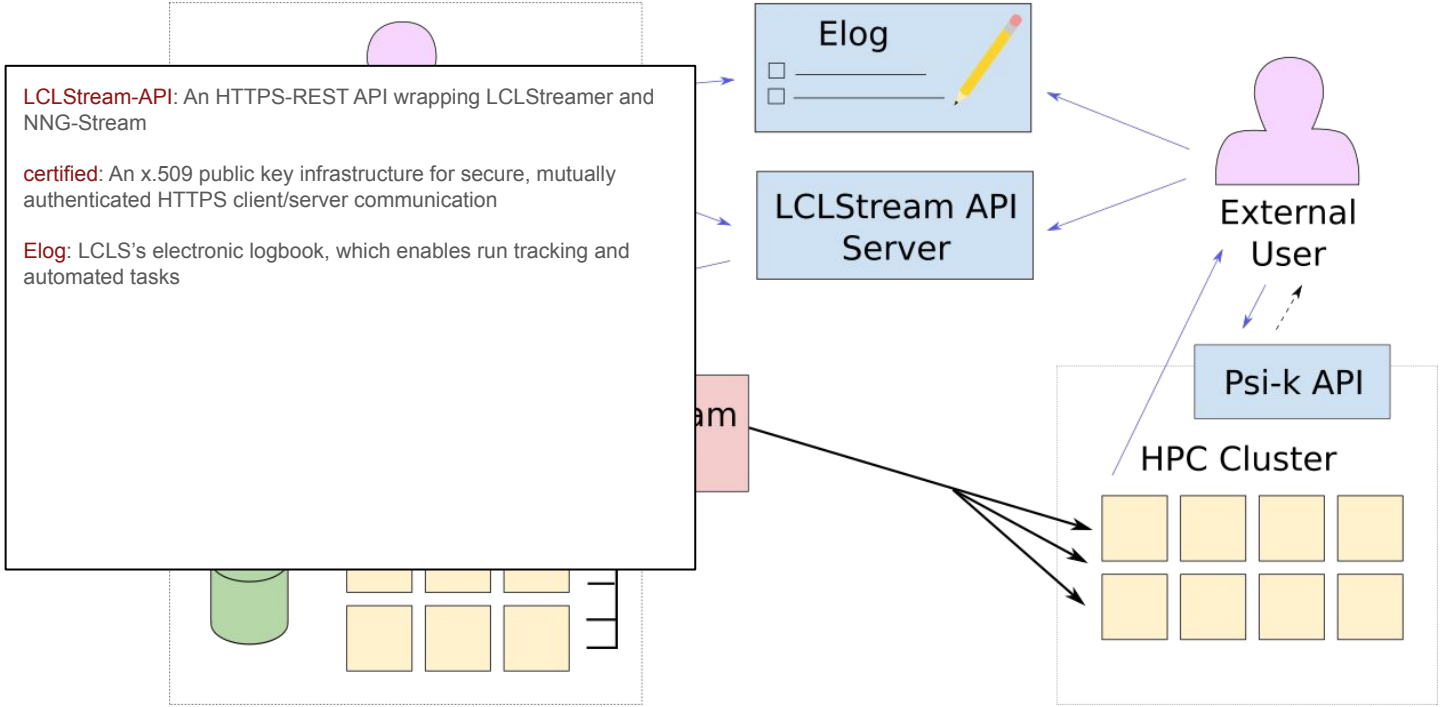

LCLStream-API: An HTTPS-REST API wrapping LCLStreamer and NNG-Stream

certified: An x.509 public key infrastructure for secure, mutually authenticated HTTPS client/server communication

Elog: LCLS's electronic logbook, which enables run tracking and automated tasks

The LCLStream Ecosystem

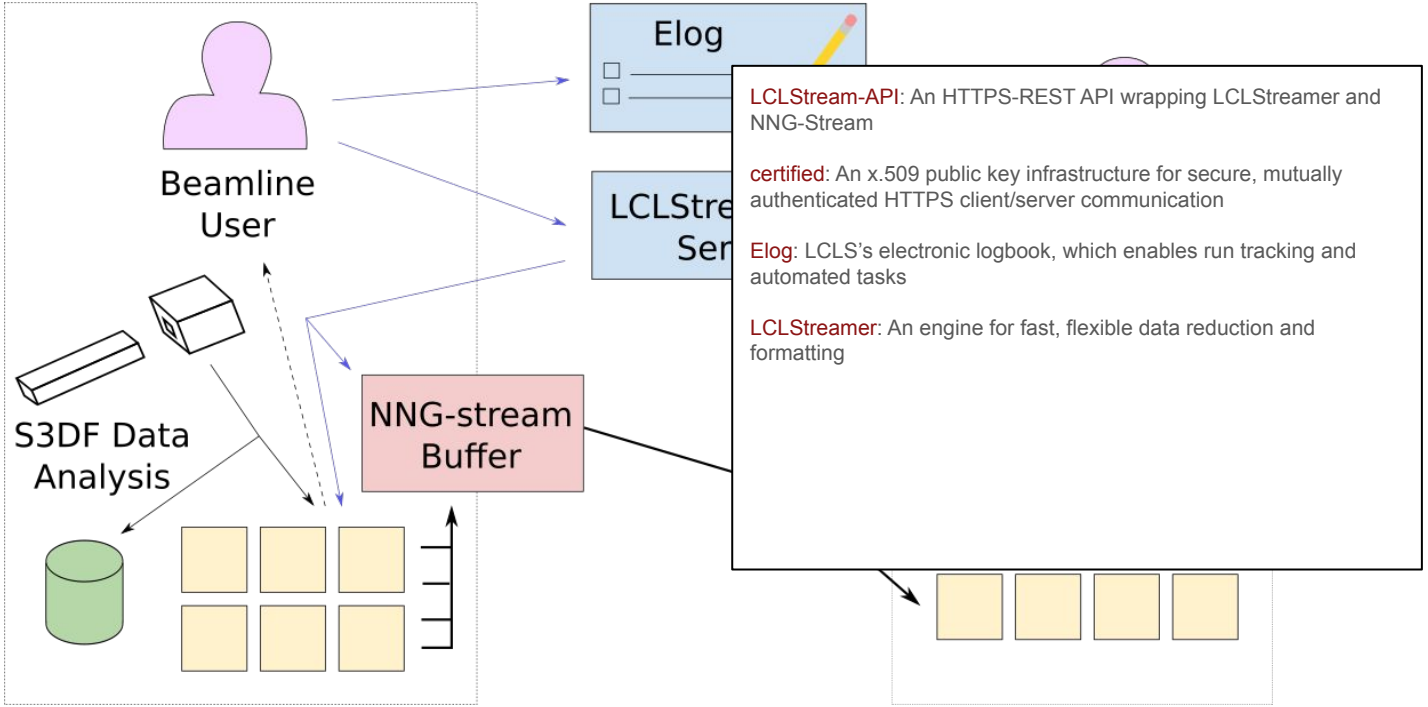

LCLStream-API: An HTTPS-REST API wrapping LCLStreamer and NNG-Stream

certified: An x.509 public key infrastructure for secure, mutually authenticated HTTPS client/server communication

Elog: LCLS's electronic logbook, which enables run tracking and automated tasks

LCLStreamer: An engine for fast, flexible data reduction and formatting

The LCLStream Ecosystem

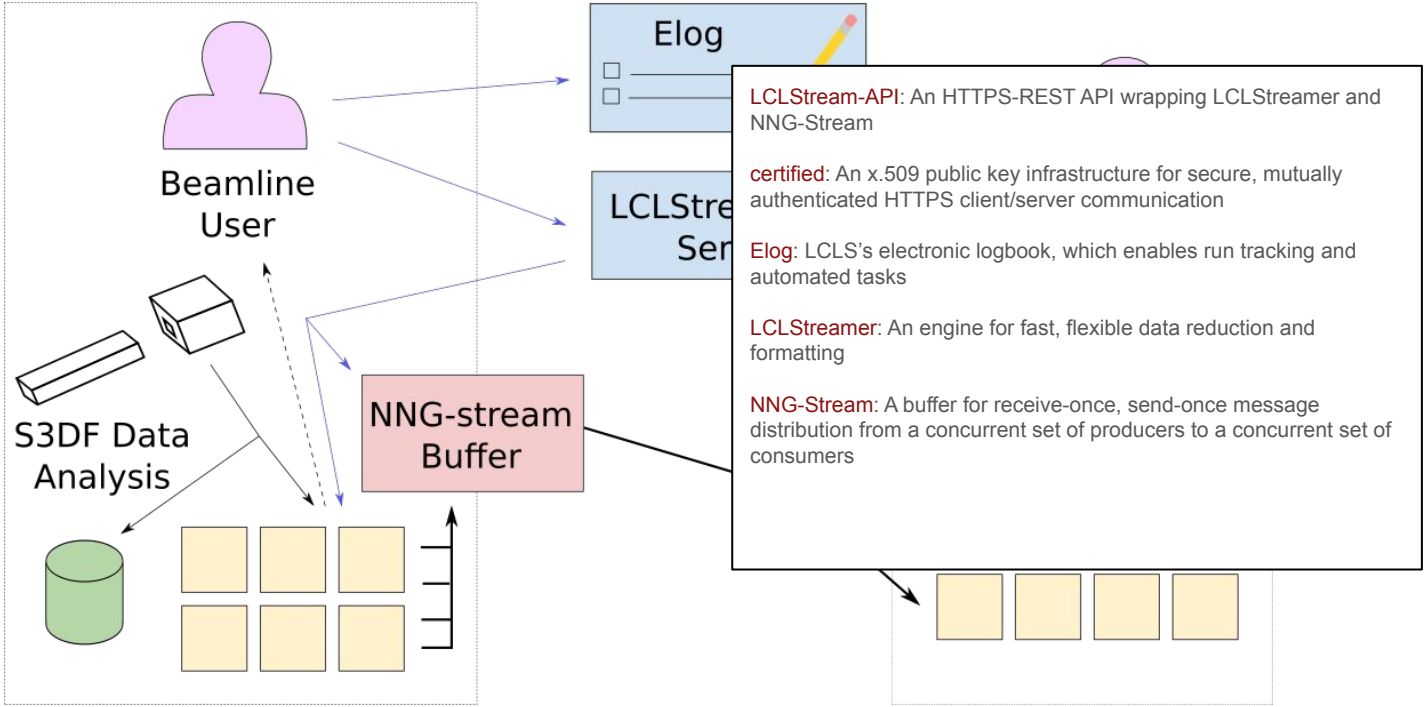

LCLStream-API: An HTTPS-REST API wrapping LCLStreamer and NNG-Stream

certified: An x.509 public key infrastructure for secure, mutually authenticated HTTPS client/server communication

Elog: LCLS's electronic logbook, which enables run tracking and automated tasks

LCLStreamer: An engine for fast, flexible data reduction and formatting

NNG-Stream: A buffer for receive-once, send-once message distribution from a concurrent set of producers to a concurrent set of consumers

The LCLStream Ecosystem

LCLStream-API: An HTTPS-REST API wrapping LCLStreamer and NNG-Stream

certified: An x.509 public key infrastructure for secure, mutually authenticated HTTPS client/server communication

Elog: LCLS's electronic logbook, which enables run tracking and automated tasks

LCLStreamer: An engine for fast, flexible data reduction and formatting

NNG-Stream: A buffer for receive-once, send-once message distribution from a concurrent set of producers to a concurrent set of consumers

Psi-k and Psik-API: A portable batch submission interface for jobs with HTTPS-REST API job and file access

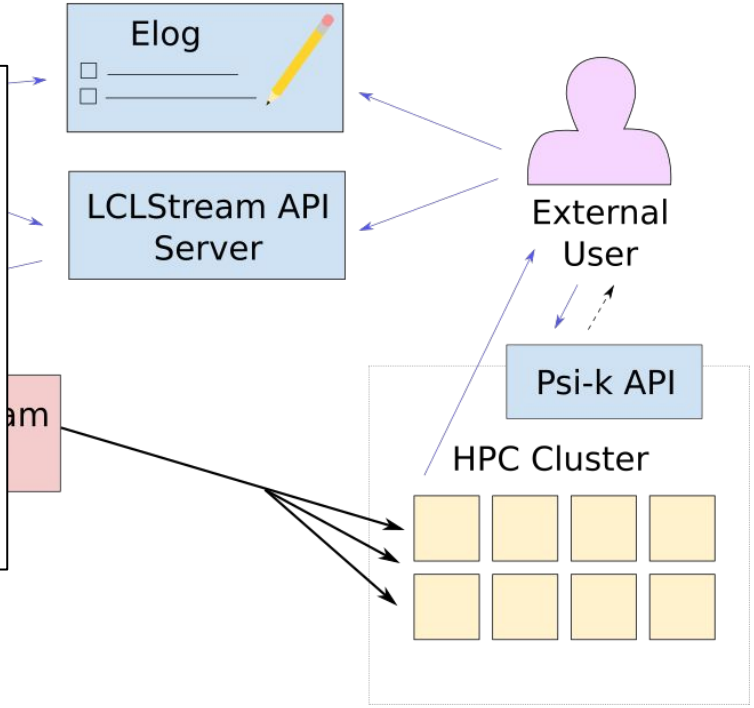

CCTBX / SIMPLON

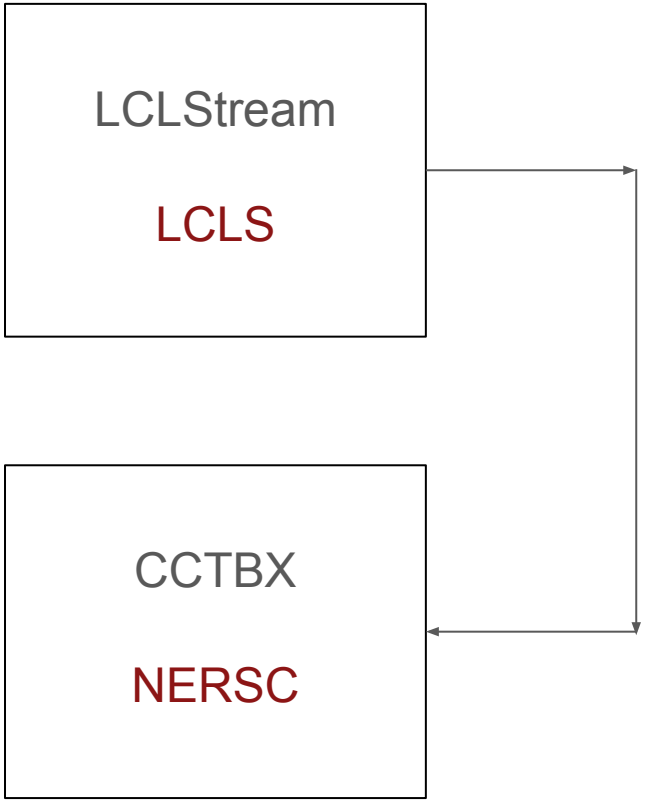

- LCLStreamer is modular and configurable
- Data sent in format required by the consumer
- Example: Collaboration with A. Brewser and D. Mittan-Moreau
- Streaming data from LCLS to CCTBX running at NERSC
- Data Format: Simplon (DECTRIS)

CCTBX / SIMPLON

- LCLStreamer is modular and configurable
- Data sent in format required by the consumer
- Example: Collaboration with A. Brewser and D. Mittan-Moreau
- Streaming data from LCLS to CCTBX running at NERSC
- Data Format: Simplon (DECTRIS)

Local LCLStream: Heterogeneous Computing

Separate:

- Data reading (LCLStreamer - Psana)
- Data Processing (Processing code - Ray)

Psana: optimized for heavily parallelized processing of single events

GPU: Batches of events in contiguous memory

LCLStream can bridge the gap and optimize GPU usage

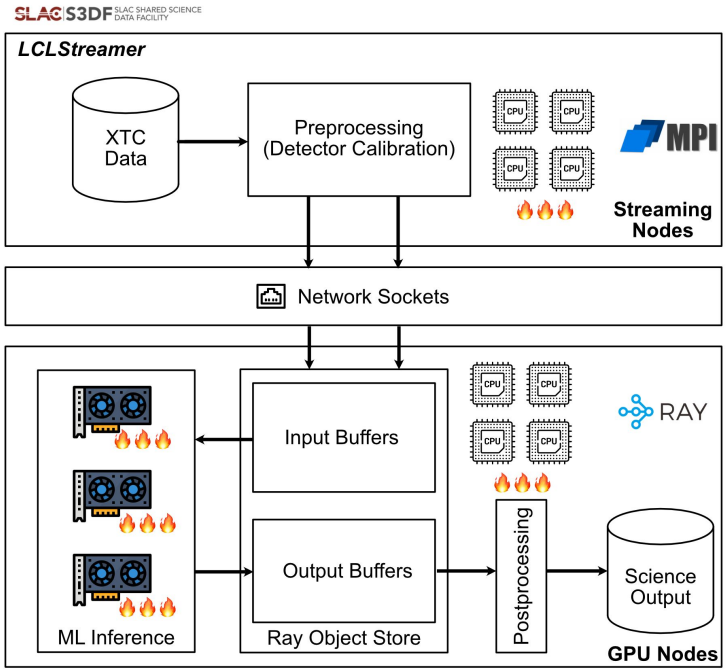

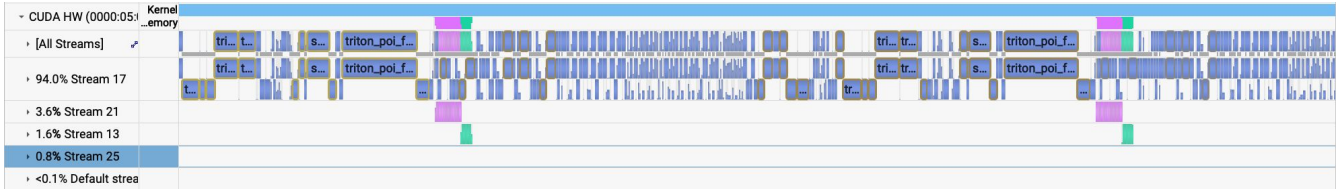

LCLStream: Multiple-lab Collaboration

SLAC National Accelerator Lab - LCLS

Valerio Mariani
Katalin Mecseki
Cong Wang
Murali Shankar
Wilko Kroger
Jana Thayer

Oak Ridge National Lab

David Rogers
Tom Beck

Lawrence Berkeley National Lab

David Mittan-Moreau
Aaron Brewster

National Energy Research Scientific Computing Center

Johannes Blaschke

THANK YOU!!

Valerio Mariani (valmar@slac.stanford.edu)

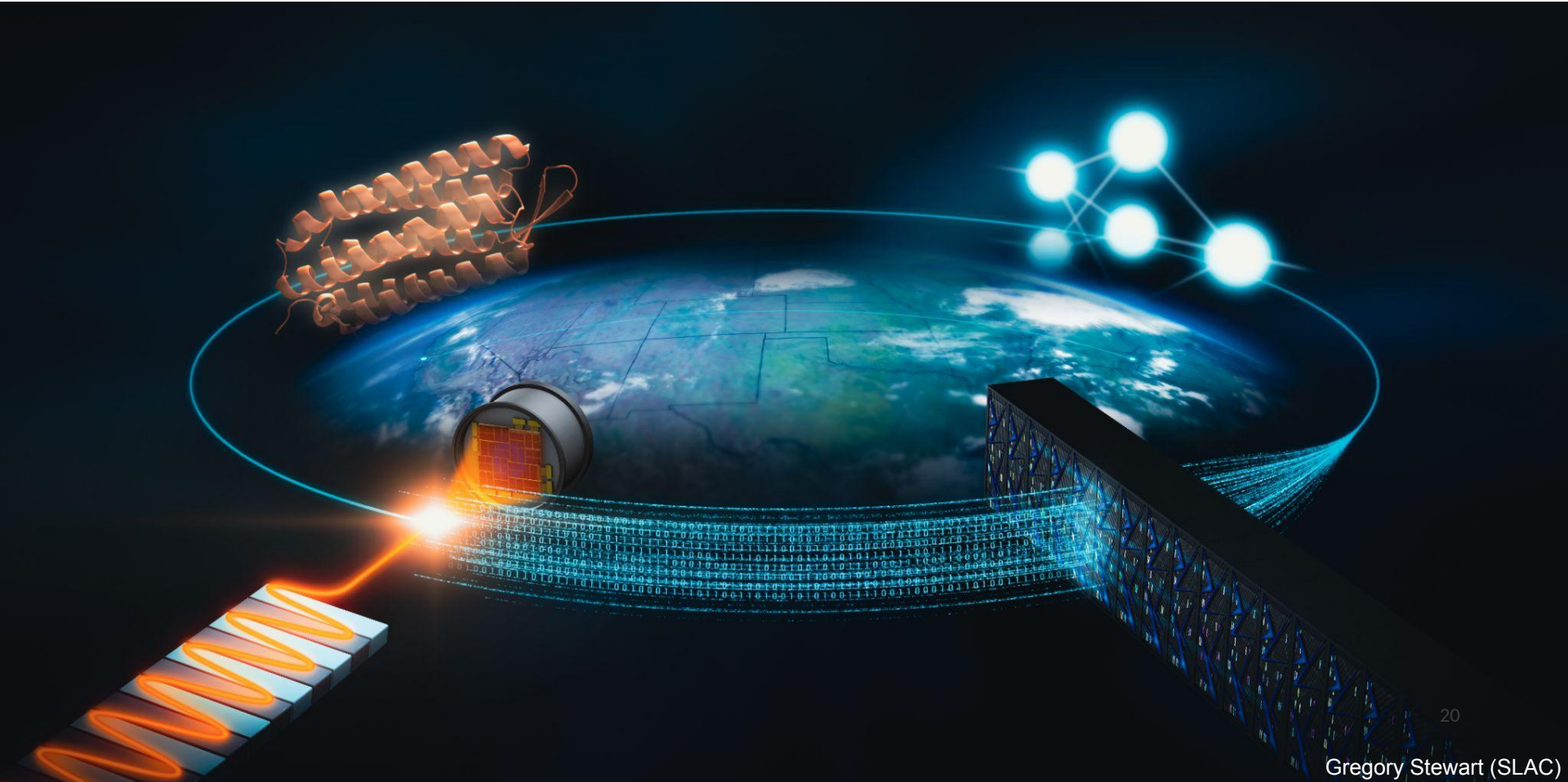

Gregory Stewart (SLAC)

Serial Crystallography (SFX)

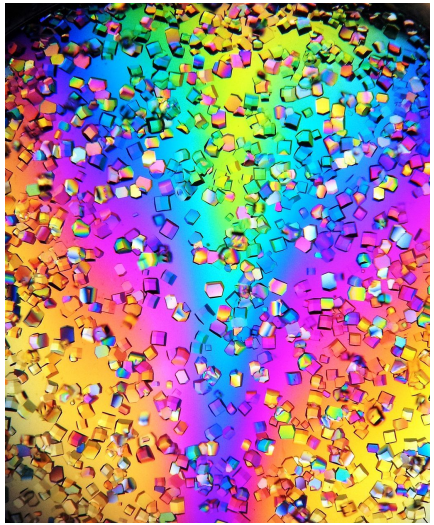

Protein Crystals

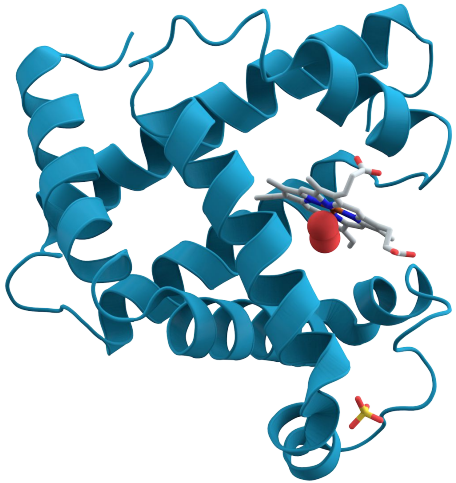

Protein Structure

Image source: Wikipedia

Serial Crystallography (SFX)

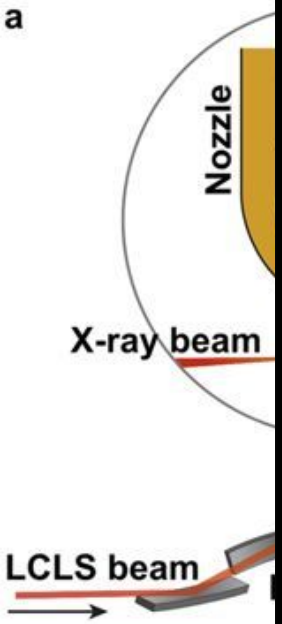

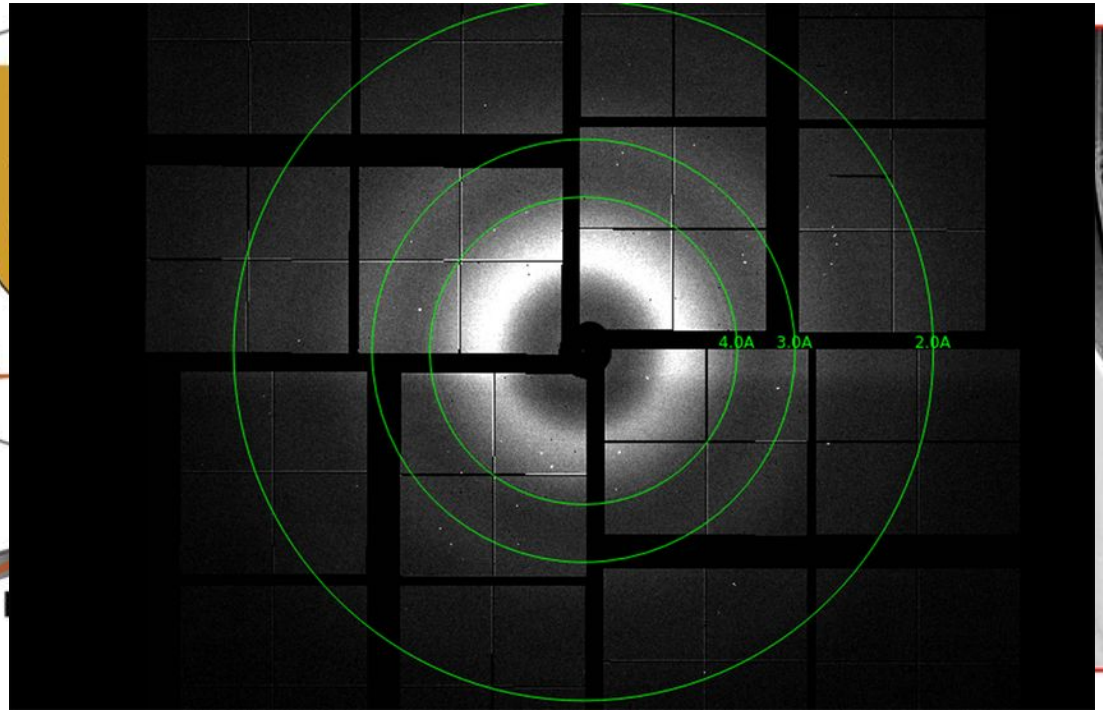

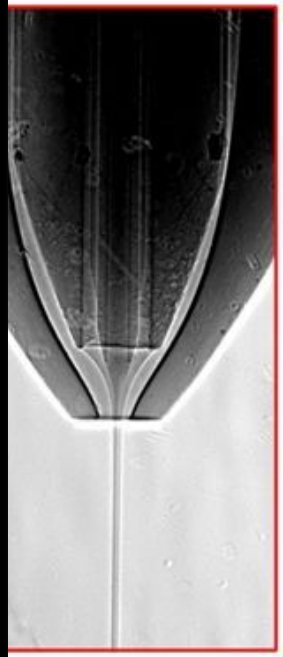

PeakNet: A 1 MHz Autonomous Bragg Peak Finder

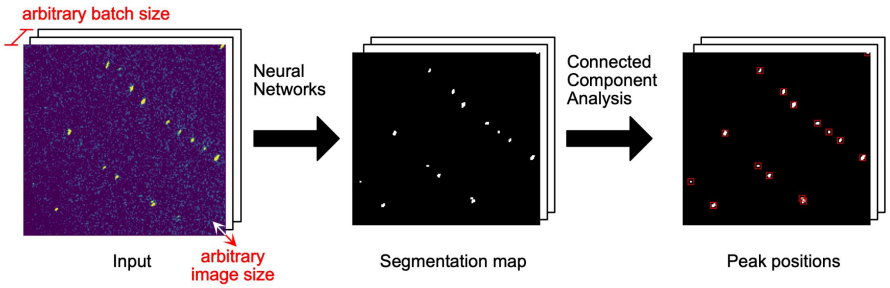

PeakNet is a deep neural network for

- Autonomous Bragg peak detection in real-time
- Adapts in real-time to shot-to-shot background changes without manual tuning
- Supervised learning (labelled data)

Autonomous pixel segmentation into

- Artifact scattering
- Background
- Bragg peaks

With no user parameter tuning.

PeakNet: A 1 MHz Autonomous Bragg Peak Finder

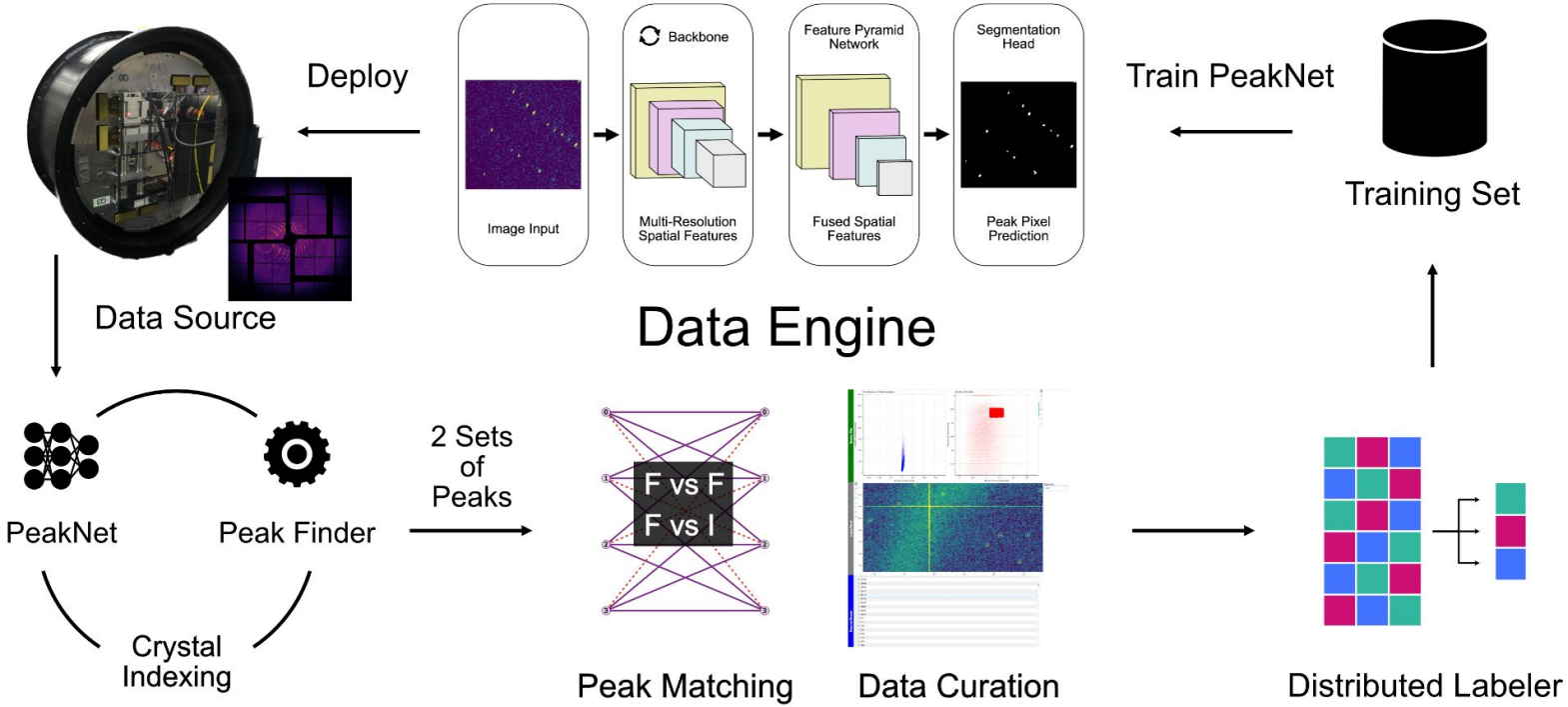

PeakNet: A 1 MHz Autonomous Bragg Peak Finder

The model is too big to be trained effectively in real time on SLAC's HPC cluster (S3DF)

External computational power is needed

ORNL enters the picture

SummitPlus

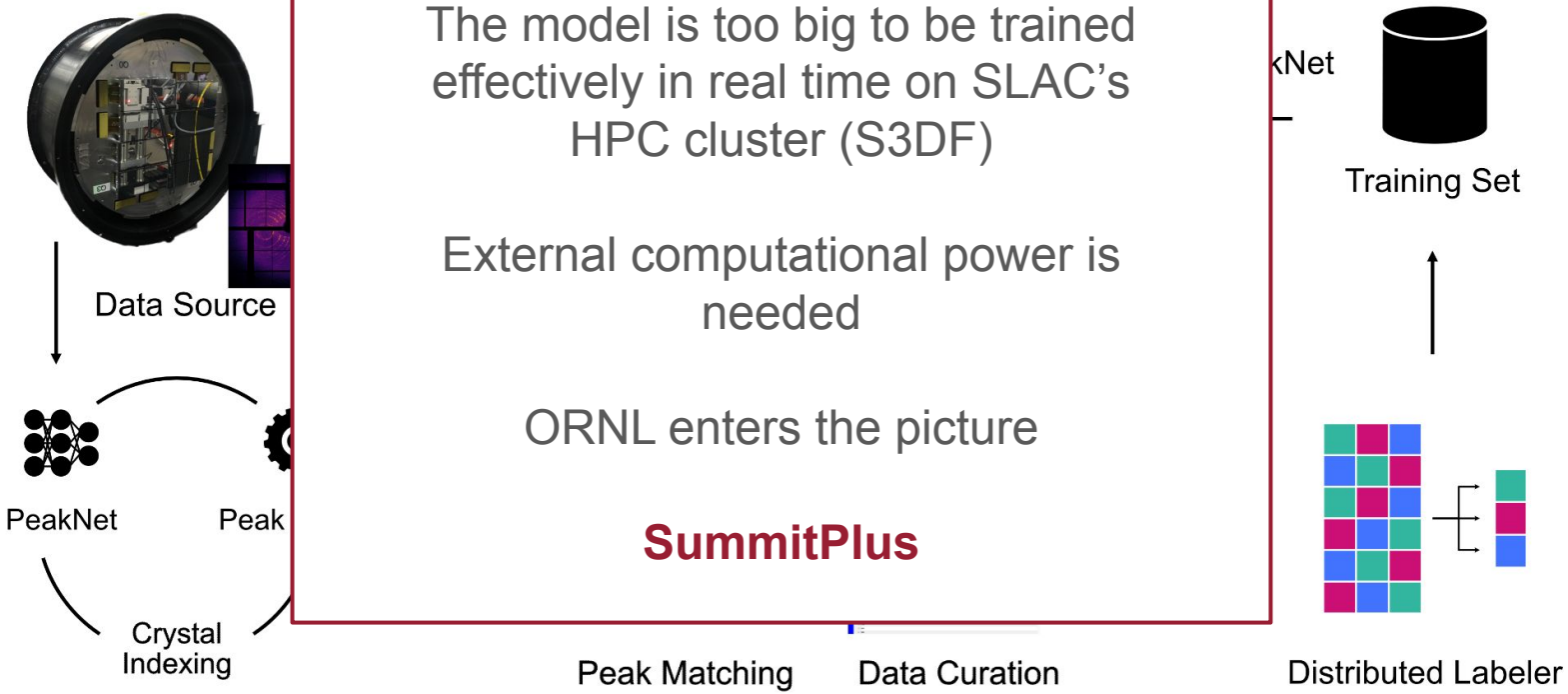

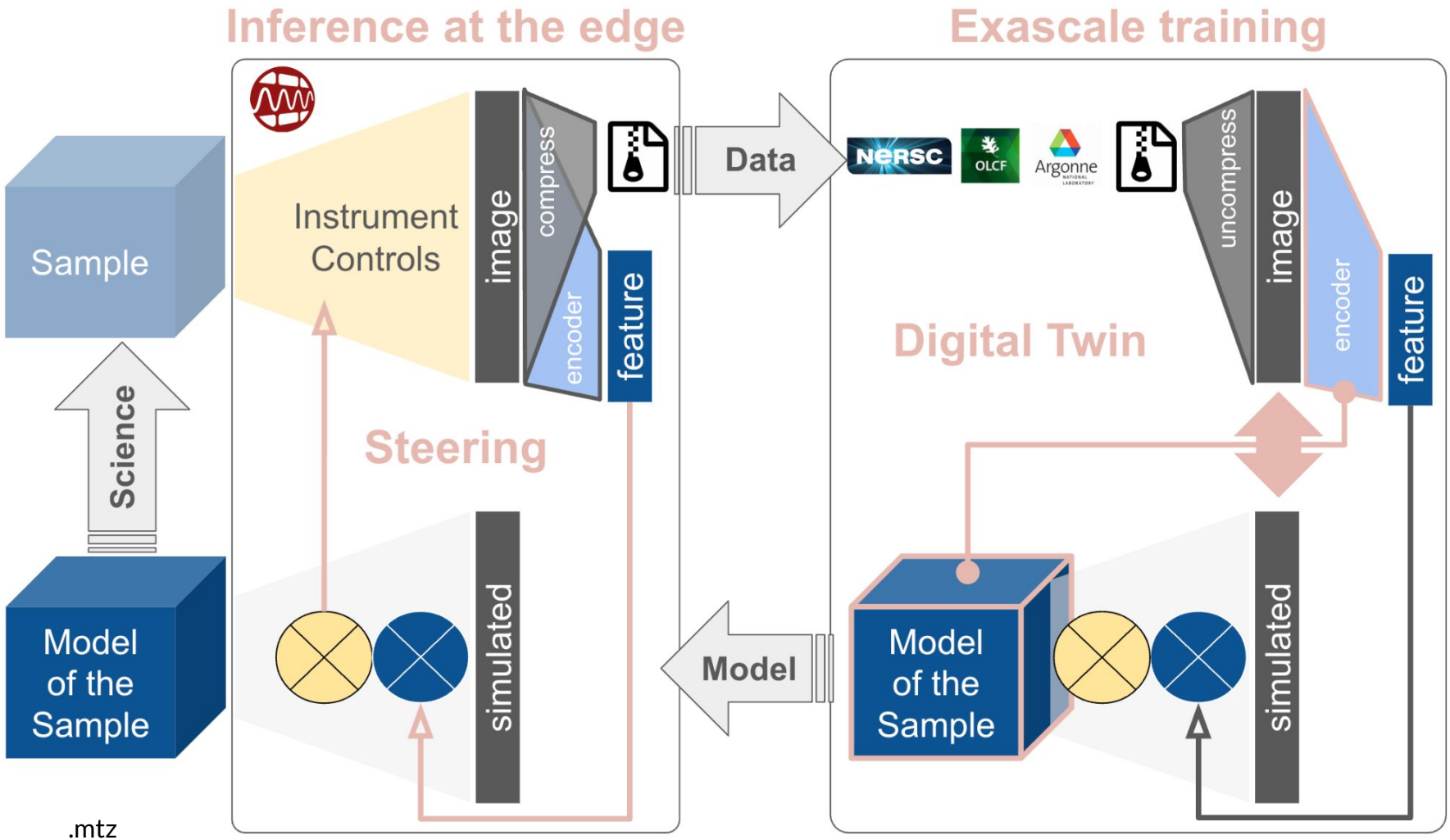
Inference at the edge
Exascale training
Sample
Science
Model of the Sample
Instrument Controls
image
compress
encoder
feature
Steering
simulated
Data
Model
NERSC
OLCF
Argonne
uncompress
image
encoder
feature
Digital Twin
Model of the Sample
simulated

.mtz

ILLUMINE - SLAC-led 5 light source + neutron source $10M, 5Y effort for Experiment Steering Infrastructure

A modular framework to close the loop between fast analysis, machine-assisted decision-making, and data acquisition to drive experiments on the timescales of seconds, minutes, or hours

Brookhaven National Laboratory

Argonne NATIONAL LABORATORY